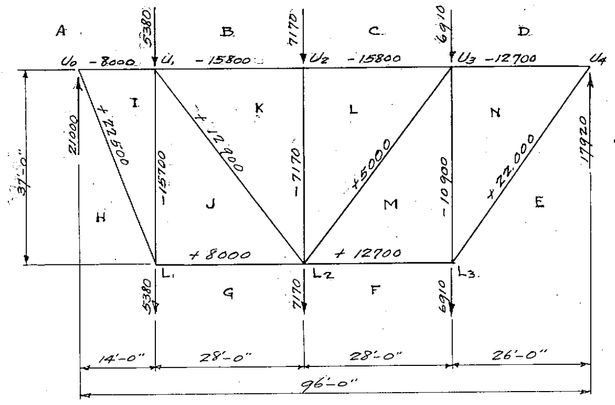

· TRUSS - HT1 ·

Scale 1" = 20'-0"

NOTE:- Stresses have been taken care of assuming the horizontal trussing acting continuously for full length of building.

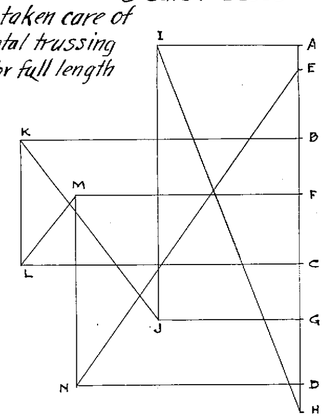

· STRESS DIAGRAM FOR HT1 ·

Scale 1" = 6000#

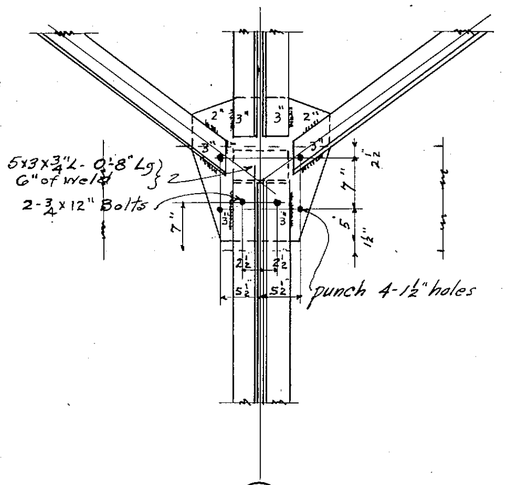

(8)

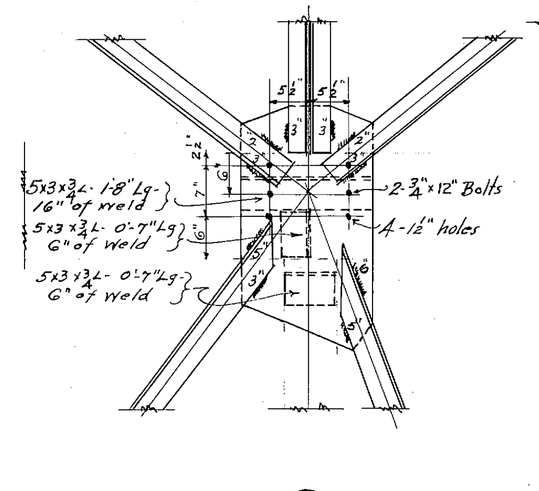

(7)

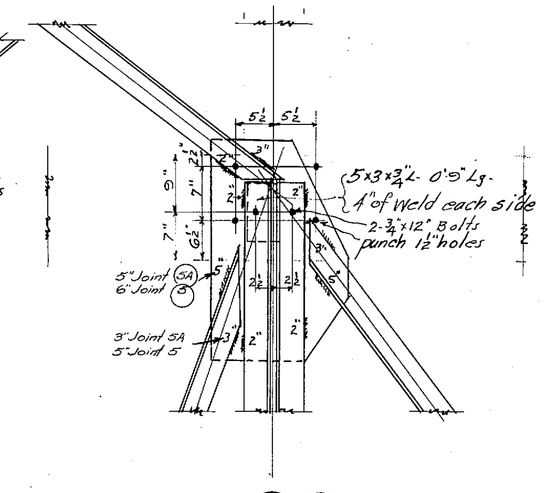

(5) (5A)

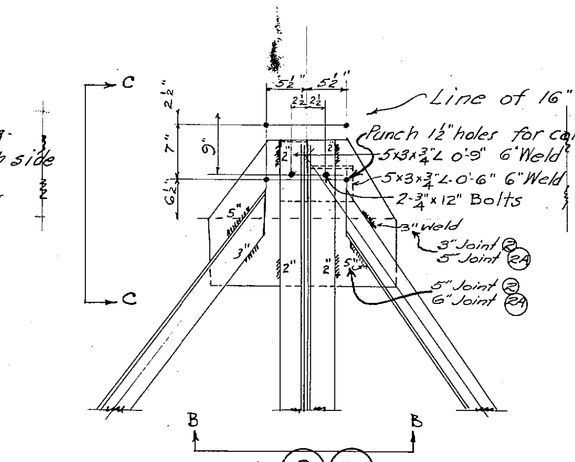

(2) (2A)

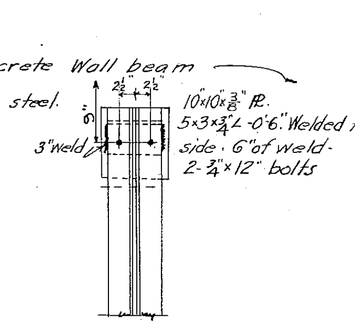

(3)

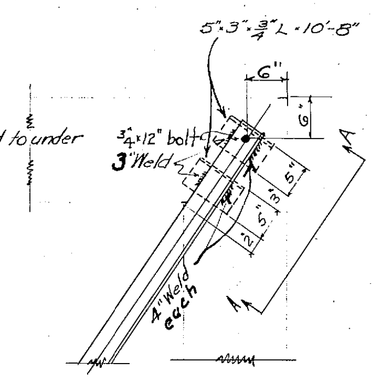

(4)

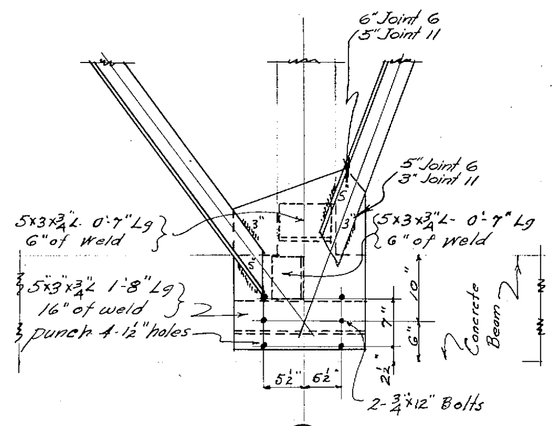

(6)

JOINT (11) SIMILAR

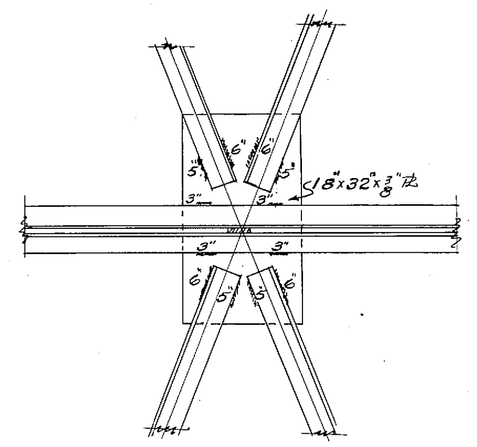

(9)

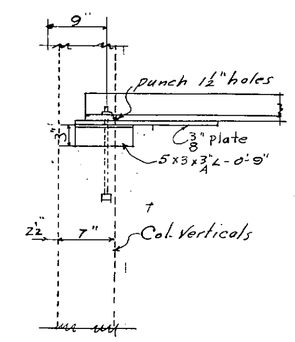

VIEW C-C

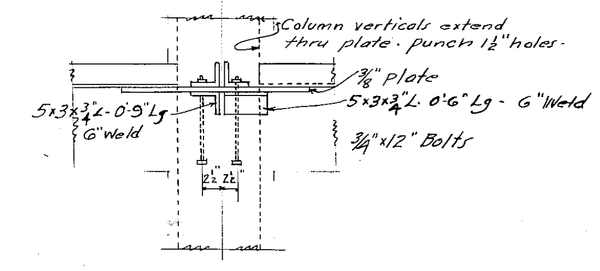

VIEW - B-B -

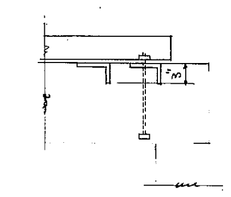

VIEW - A-A -

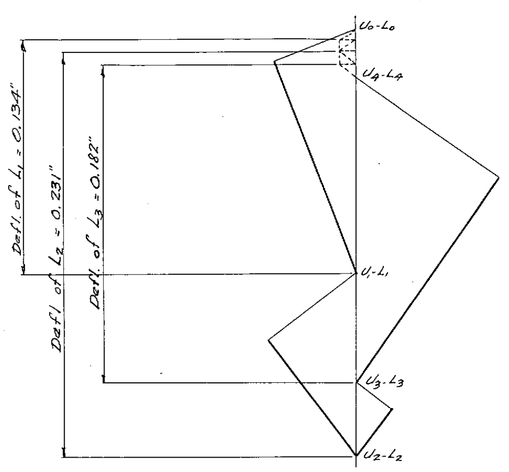

· WILLOT DIAGRAM for DEFLECTION in HT1 ·

Scale 1" = 0.06"

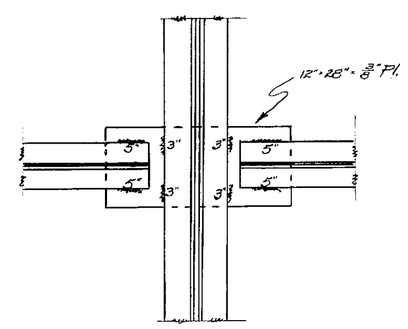

(14) Intersection of Truss and Cross Frame.

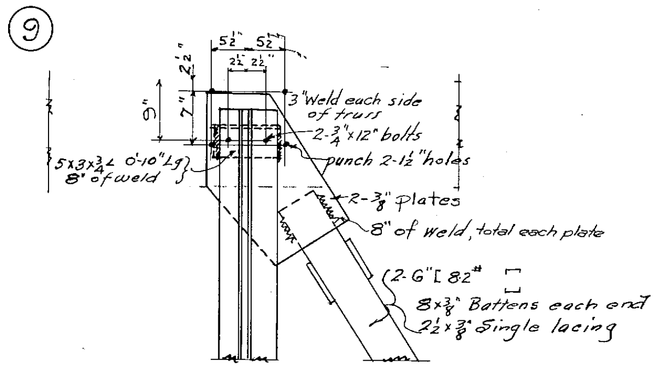

(10)

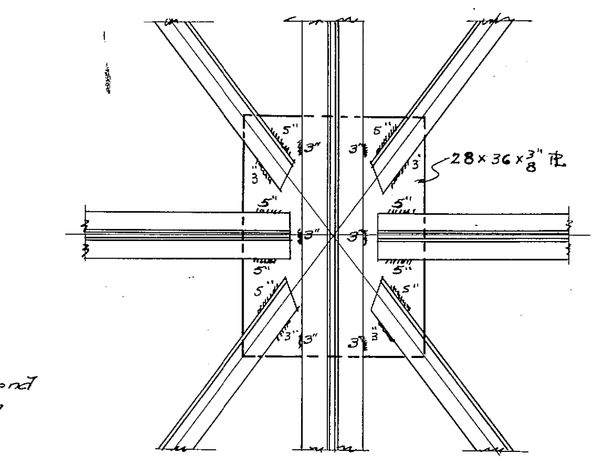

(1)

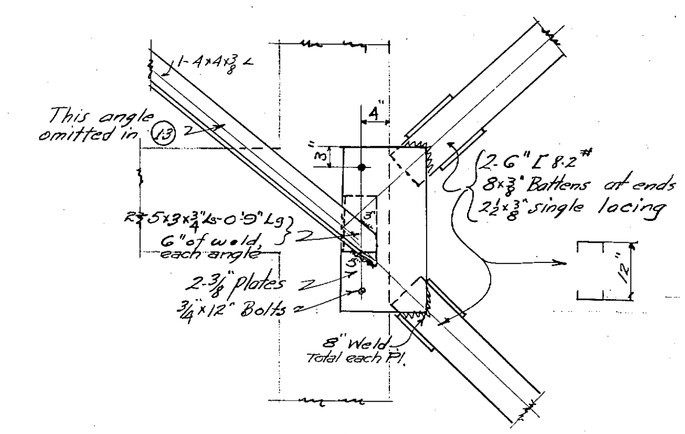

(12)

JOINT (13) SIMILAR

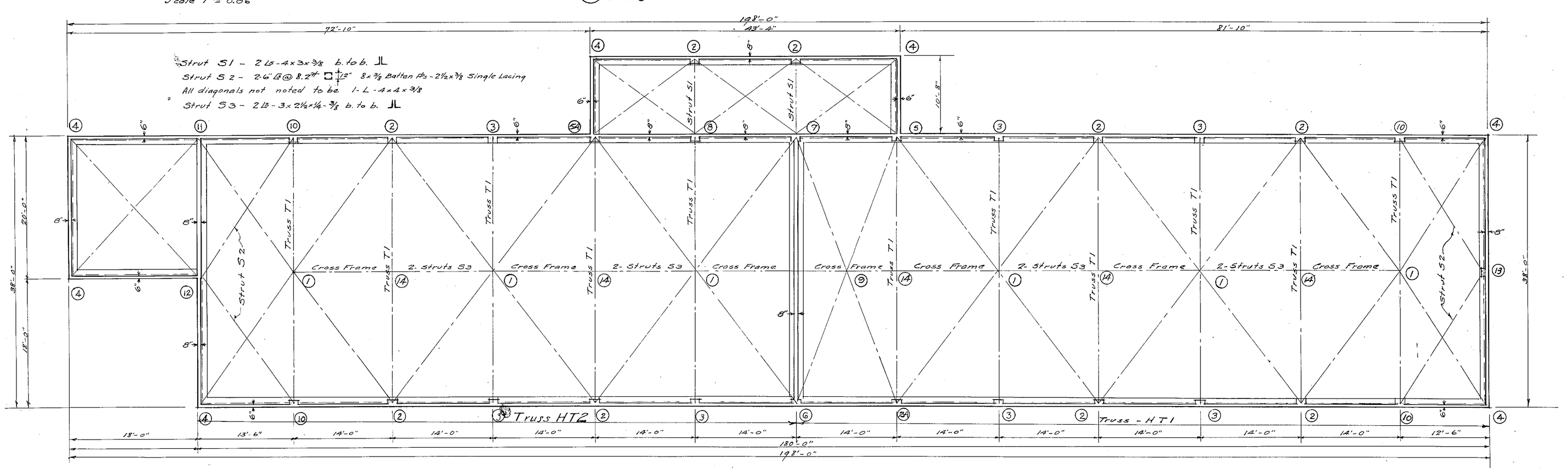

· ROOF · FRAMING · PLAN ·

SHOWING HORIZONTAL TRUSSES

Scale 1/8" = 1'-0"

· NOTES ·

Bed Pls. with Ls welded thereto are to be set in concrete in exact position and truss and bearing system field welded thereto.

In all cases, 3" leg of anchor Ls are set vertical and should fit neatly into concrete.

Electric Arc Welding to have 3/8" bead, minimum length of 2".

Anchor Ls are to be welded to Pls. with amount of weld specified and symmetrically placed on each long edge of the L.

All plates 3/8" thick.

AERONAUTICS BUILDING

CHAFFEY JUNIOR COLLEGE

ONTARIO, CALIF.

SCALES AS SHOWN 1/8" = 1'-0"

JANUARY 1934

FEB. 5, 1934

Design of Approval

David H. Merrill

David H. Merrill Reg. Structural Engr.

C. H. Kunde per F.A.J.

SHEET No 5